XBC/XEC SU

Standard

Contents

Performance specifications ····· 32
Wiring ····· 33

00 01 02 03 04 05 06 07 08 09 10 11 12 13 14 15 16 17
18 19 20 21 22 23 24 25 26 27 28 29 30 31 32 33 34 35
IN
OUT
00 01 02 03 04 05 06 07 08 09 10 11
12 13 14 15 16 17 18 19 20 21 22 23
XBO-TN04A
BATTERY
XBO-RTCA

Standard type

Performance specifications

Item	XBC/XEC-DN20SU XBC/XEC-DR20SU XBC/XEC-DP20SU	XBC/XEC-DN30SU XBC/XEC-DR30SU XBC/XEC-DP30SU	XBC/XEC-DN40SU XBC/XEC-DR40SU XBC/XEC-DP40SU	XBC/XEC-DN60SU XBC/XEC-DR60SU XBC/XEC-DP60SU
Control method	Repetitive, cyclic, interrupt, constant scan			
I/O control method	Refresh mode (Batch processing by scan synchronization), Direct mode by instruction			
Programming language	Ladder diagram, Instruction List			
Processing speed	94 ns / Step			
Program capacity	15Kstep / 200KB			
Main unit I/O points	20 (Input:12, Output:8)	30 (Input:18, Output:12)	40 (Input:24, Output:16)	60 (Input:36, Output:24)
Max. I/O points (Main + Expansion 7 stages)	244 points	254 points	264 points	284 points
Total program	128			
Operation mode	RUN, STOP, DEBUG			
Self diagnosis	Detects errors of scan time, memory error, I/O error, battery error, power error, etc.			
Program port	RS-232C 1 channel (Loader), USB 1 channel (U-type model)			
Retain data at power failure	Latch area setting at basic parameter			
Built-in functions	RS-232C / RS-485(2 ch), Pulse catch, Input filter, External interrupt, PID control, High-speed counter, Positioning			

Data memory

XBC			XEC		
Data area	P	P0000 ~ P1023F (16,384 points)	Symbolic variable	A	16KB (Max. 16KB retain setting abailable)
	M	M0000 ~ M1023F (16,384 points)			
	K	K0000 ~ K4095F (65,536 points)	Input variable	I	2KB (%IX 15.15.63)
	L	L0000 ~ L2047F (32,768 points)	Output variable	Q	2KB (%QX 15.15.63)
	F	F0000 ~ F1023F (16,384 points)	Direct variable	M	8KB (Max. retain setting available)
	T	100ms, 10ms, 1ms: T0000 ~ T1023 (1,024) (Adjustable by parameter setting)		R	20KB (1 block)
	C	C0000 ~ C1023 (1,024)		W	20KB
	S	S00.00 ~ S127.99	Flag variable	F	2KB
	D	D0000 ~ D10239 (10,240 word)		K	8KB
	U	U00.00 ~ U0A.31 (Analog data refresh area: 352 word)		L	4KB
				U	1KB
	Z	Z000 ~ Z127 (128 word)	Flash area		20KB (2 block)
	R	N0000 ~ N10236 (10,240 word)			

*Some products are due in market soon.

XBC/XEC-DR20SU
XBC/XEC-DN20SU
XBC/XEC-DP20SU

Input wiring
(sink/source type)

Circuit configuration

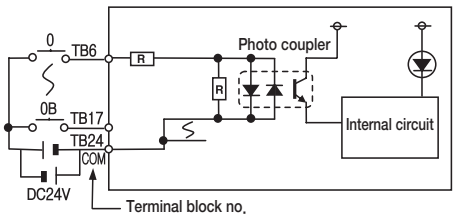

No.	Contact	No.	Contact
TB2	485+	TB1	RX
TB4	485-	TB3	TX
TB6	00	TB5	SG
TB8	02	TB7	01
TB10	04	TB9	03
TB12	06	TB11	05
TB14	08	TB13	07
TB16	0A	TB15	09
TB18	NC	TB17	0B
TB20	NC	TB19	NC
TB22	NC	TB21	NC
TB24	COM	TB23	NC

Type

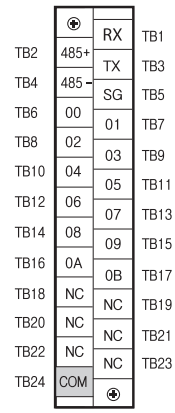

XBC/XEC-DR20SU

Relay output wiring

Circuit configuration

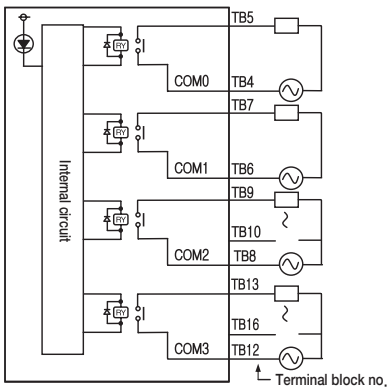

No.	Contact	No.	Contact
TB2	PE	TB1	AC100
TB4	COM0	TB3	-240V
TB6	COM1	TB5	40
TB8	COM2	TB7	41
TB10	43	TB9	42
TB12	COM3	TB11	NC
TB14	45	TB13	44
TB16	47	TB15	46
TB18	NC	TB17	NC
TB20	NC	TB19	NC
TB22	NC	TB21	NC
TB24	24G	TB23	24V

Type

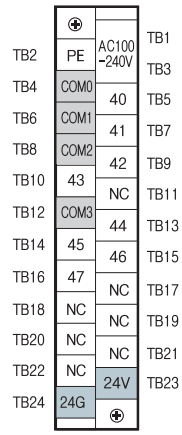

XBC/XEC-DN20SU

Transistor output wiring
(sink type)

Circuit configuration

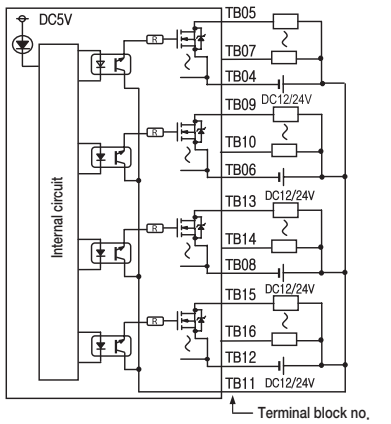

No.	Contact	No.	Contact
TB2	PE	TB1	AC100
TB4	COM0	TB3	-240V
TB6	COM1	TB5	40
TB8	COM2	TB7	41
TB10	43	TB9	42
TB12	COM3	TB11	P
TB14	45	TB13	44
TB16	47	TB15	46
TB18	NC	TB17	NC
TB20	NC	TB19	NC
TB22	NC	TB21	NC
TB24	24G	TB23	24V

Type

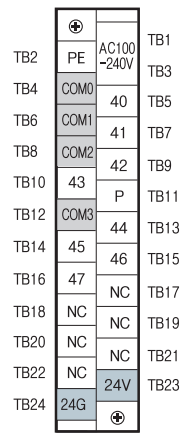

* XBC input : P00~P23, XEC input : I00~I35 * XBC output : P40~P57, XEC output : Q00~Q23

XBC/XEC-DP32H
Transistor output wiring
(source type)

Circuit configuration

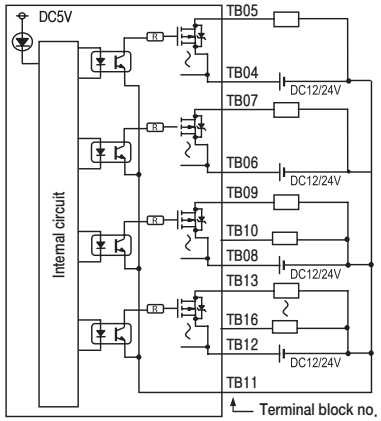

No.	Contact	No.	Contact
TB2	PE	TB1	AC100
TB4	C0M0	TB3	-240V
TB6	C0M1	TB5	Q00
TB8	C0M2	TB7	Q01
TB10	Q03	TB9	Q02
TB12	COM3	TB11	N
TB14	Q05	TB13	Q04
TB16	Q07	TB15	Q06
TB18	NC	TB17	NC
TB20	NC	TB19	NC
TB22	NC	TB21	NC
TB24	24G	TB23	24V

Type

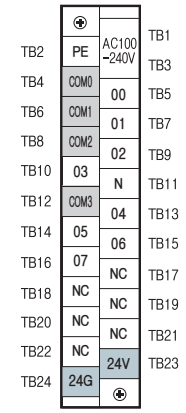

XBC/XEC-DR30SU
XBC/XEC-DN30SU
XBC/XEC-DP30SU
Input wiring
(sink/source type)

Circuit configuration

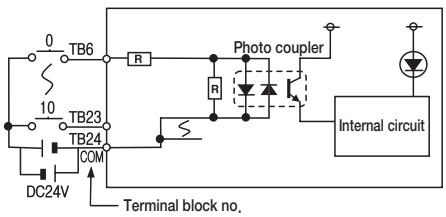

No.	Contact	No.	Contact
TB2	485+	TB1	RX
TB4	485-	TB3	TX
TB6	00	TB5	SG
TB8	02	TB7	01
TB10	04	TB9	03
TB12	06	TB11	05
TB14	08	TB13	07
TB16	0A	TB15	09
TB18	0C	TB17	0B
TB20	0E	TB19	0D
TB22	10	TB21	0F
TB24	COM	TB23	11

Type

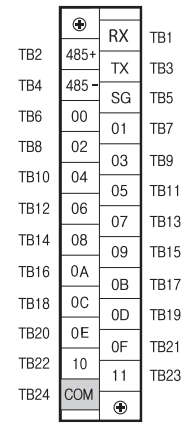

XBC/XEC-DR30SU
Relay output wiring

Circuit configuration

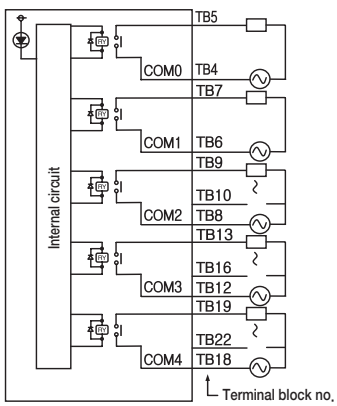

No.	Contact	No.	Contact
TB2	PE	TB1	AC100
TB4	COM0	TB3	-240V
TB6	COM1	TB5	40
TB8	COM2	TB7	41
TB10	43	TB9	42
TB12	COM3	TB11	NC
TB14	45	TB13	44
TB16	47	TB15	46
TB18	COM4	TB17	NC
TB20	49	TB19	48
TB22	4B	TB21	4A
TB24	24G	TB23	24V

Type

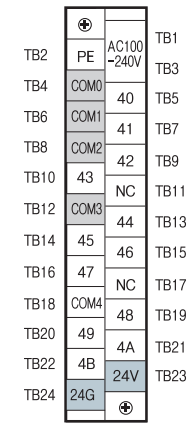

* XBC input : P00~P23, XEC input : I00~I35 * XBC output : P40~P57, XEC output : Q00~Q23

XBC/XEC-DN30SU

Transistor output wiring
(sink type)

Circuit configuration

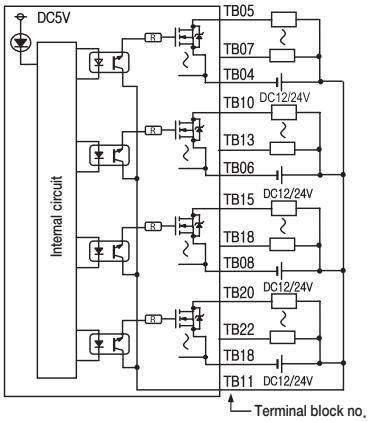

No.	Contact	No.	Contact
TB2	PE	TB1	AC100
TB4	COM0	TB3	-240V
TB6	COM1	TB5	40
TB8	COM2	TB7	41
TB10	43	TB9	42
TB12	COM3	TB11	P
TB14	45	TB13	44
TB16	47	TB15	46
TB18	COM4	TB17	NC
TB20	49	TB19	48
TB22	4B	TB21	4A
TB24	24G	TB23	24V

Type

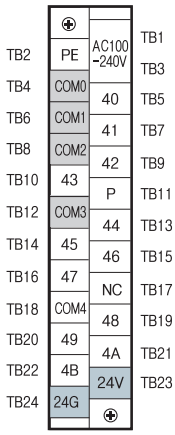

XBC/XEC-DP30SU

Transistor output wiring
(source type)

Circuit configuration

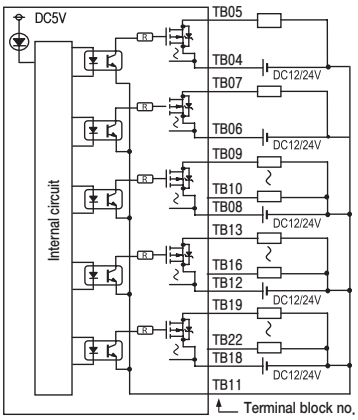

No.	Contact	No.	Contact
TB2	PE	TB1	AC100
TB4	COM0	TB3	-240V
TB6	COM1	TB5	Q00
TB8	COM2	TB7	Q01
TB10	Q03	TB9	Q02
TB12	COM3	TB11	N
TB14	Q05	TB13	Q04
TB16	Q07	TB15	Q06
TB18	COM4	TB17	NC
TB20	Q09	TB19	Q08
TB22	Q11	TB21	Q10
TB24	24G	TB23	24V

Type

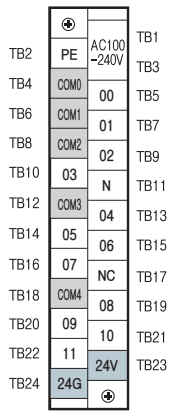

XBC/XEC-DR40SU
XBC/XEC-DN40SU
XBC/XEC-DP40SU

DC24 Input wiring
(sink/source type)

Circuit configuration

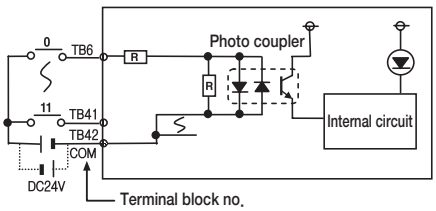

No.	Contact	No.	Contact
TB2	485+	TB1	RX
TB4	485-	TB3	TX
TB6	00	TB5	SG
TB8	02	TB7	01
TB10	04	TB9	03
TB12	06	TB11	05
TB14	08	TB13	07
TB16	0A	TB15	09
TB18	0C	TB17	0B
TB20	0E	TB19	0D
TB22	10	TB21	0F
TB24	12	TB23	11
TB26	14	TB25	13
TB28	16	TB27	15
TB30	COM	TB29	17

Type

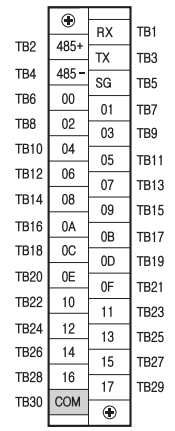

* XBC input : P00~P23, XEC input : I00~I35 * XBC output : P40~P57, XEC output : Q00~Q23

XBC/XEC-DR40SU
Relay output wiring

Circuit configuration

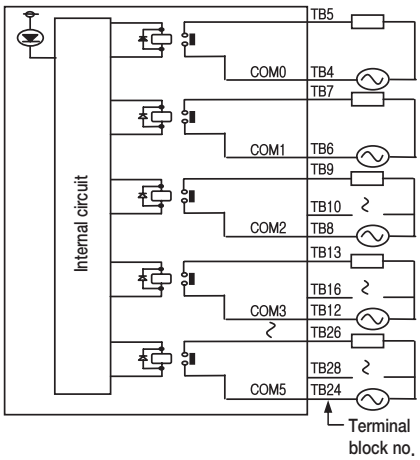

No.	Contact	No.	Contact
TB2	PE	TB1	AC100
TB4	C0M0	TB3	-240V
TB6	C0M1	TB5	40
TB8	C0M2	TB7	41
TB10	43	TB9	42
TB12	COM3	TB11	NC
TB14	45	TB13	44
TB16	47	TB15	46
TB18	COM4	TB17	NC
TB20	49	TB19	48
TB22	4B	TB21	4A
TB24	COM5	TB23	NC
TB26	4D	TB25	4C
TB28	4F	TB27	4E
TB30	24G	TB29	24V

Type

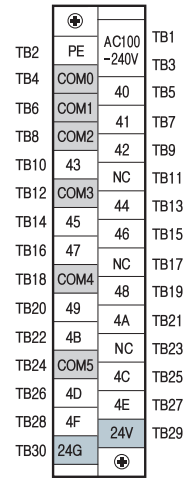

XBC/XEC-DN40SU
Transistor output wiring
(sink type)

Circuit configuration

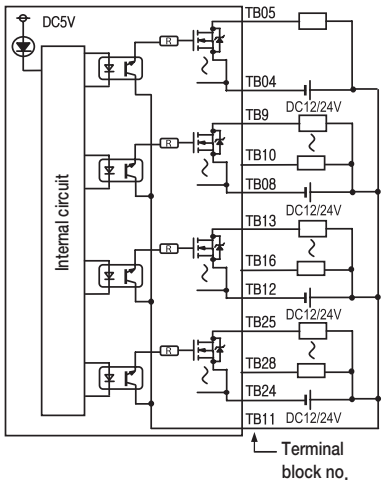

No.	Contact	No.	Contact
TB2	PE	TB1	AC100
TB4	C0M0	TB3	-240V
TB6	C0M1	TB5	40
TB8	C0M2	TB7	41
TB10	43	TB9	42
TB12	COM3	TB11	P
TB14	45	TB13	44
TB16	47	TB15	46
TB18	COM4	TB17	NC
TB20	49	TB19	48
TB22	4B	TB21	4A
TB24	COM5	TB23	NC
TB26	4D	TB25	4C
TB28	4F	TB27	4E
TB30	24G	TB29	24V

Type

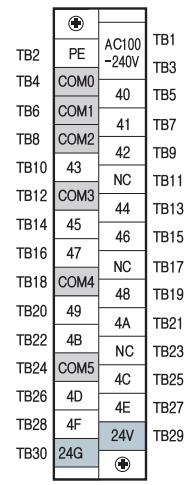

XBC/XEC-DP40SU
Transistor output wiring
(source type)

Circuit configuration

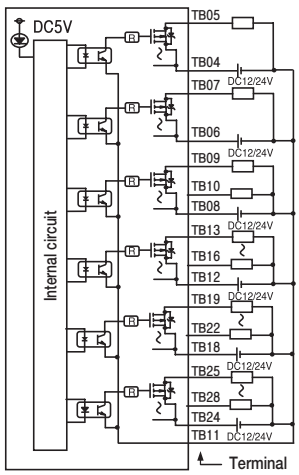

No.	Contact	No.	Contact
TB2	PE	TB1	AC100
TB4	C0M0	TB3	-240V
TB6	C0M1	TB5	00
TB8	C0M2	TB7	01
TB10	03	TB9	02
TB12	COM3	TB11	N
TB14	05	TB13	04
TB16	07	TB15	06
TB18	COM4	TB17	NC
TB20	09	TB19	08
TB22	11	TB21	10
TB24	COM5	TB23	NC
TB26	13	TB25	12
TB28	15	TB27	14
TB30	24G	TB29	24V

Type

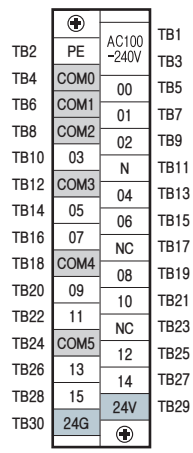

* XBC input : P00~P23, XEC input : I00~I35 * XBC output : P40~P57, XEC output : Q00~Q23

XBC/XEC-DR60SU
XBC/XEC-DN60SU
XBC/XEC-DP60SU

Input wiring
(sink/source type)

Circuit configuration

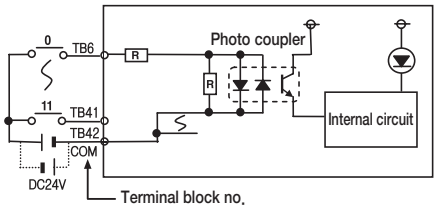

No.	Contact	No.	Contact
TB2	485+	TB1	RX
TB4	485-	TB3	TX
TB6	00	TB5	SG
TB8	02	TB7	01
TB10	04	TB9	03
TB12	06	TB11	05
TB14	08	TB13	07
TB16	0A	TB15	09
TB18	0C	TB17	0B
TB20	0E	TB19	0D
TB22	10	TB21	0F
TB24	12	TB23	11
TB26	14	TB25	13
TB28	16	TB27	15
TB30	18	TB29	17
TB32	1A	TB31	19
TB34	1C	TB33	1B
TB36	1E	TB35	1D
TB38	20	TB37	1F
TB40	22	TB39	21
TB42	COM	TB41	23

Type

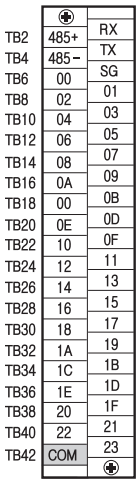

XBC/XEC-DR60SU

Relay output wiring

Circuit configuration

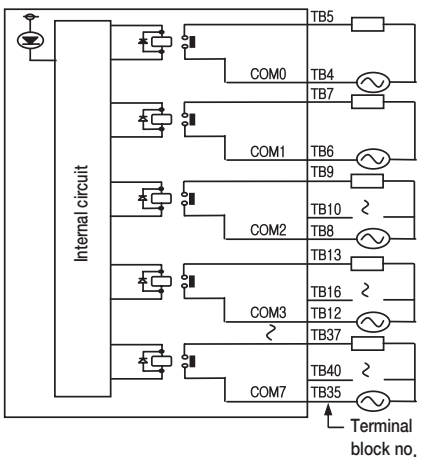

No.	Contact	No.	Contact
TB2	PE	TB1	AC100
TB4	COM0	TB3	-240V
TB6	COM1	TB5	40
TB8	COM2	TB7	41
TB10	43	TB9	42
TB12	COM3	TB11	NC
TB14	45	TB13	44
TB16	47	TB15	46
TB18	COM4	TB17	NC
TB20	49	TB19	48
TB22	4B	TB21	4A
TB24	COM5	TB23	NC
TB26	4D	TB25	4C
TB28	4F	TB27	4E
TB30	COM6	TB29	NC
TB32	51	TB31	50
TB34	53	TB33	52
TB36	COM7	TB35	NC
TB38	55	TB37	54
TB40	57	TB39	56
TB42	24G	TB41	24V

Type

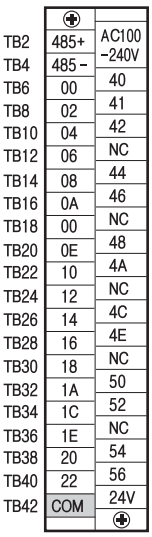

* XBC input : P00~P23, XEC input : I00~I35 * XBC output : P40~P57, XEC output : Q00~Q23

XBC/XEC-DN60SU

Transistor output wiring
(sink type)

Circuit configuration

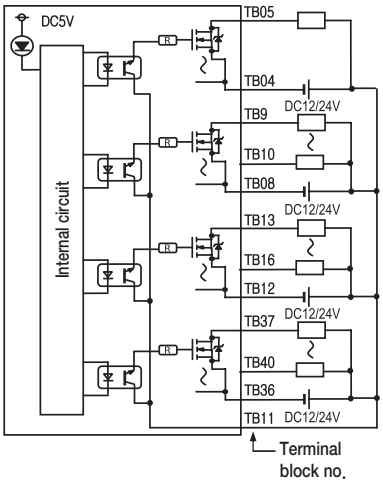

No.	Contact	No.	Contact
TB2	PE	TB1	AC100
TB4	C0M0	TB3	-240V
TB6	C0M1	TB5	40
TB8	C0M2	TB7	41
TB10	43	TB9	42
TB12	COM3	TB11	P
TB14	45	TB13	44
TB16	47	TB15	46
TB18	COM4	TB17	NC
TB20	49	TB19	48
TB22	4B	TB21	4A
TB24	COM5	TB23	NC
TB26	4D	TB25	4C
TB28	4F	TB27	4E
TB30	COM6	TB29	NC
TB32	51	TB31	50
TB34	53	TB33	52
TB36	COM7	TB35	NC
TB38	55	TB37	54
TB40	57	TB39	56
TB42	24G	TB41	24V

Type

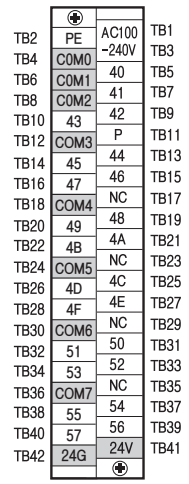

XBC/XEC-DP60SU

Transistor output wiring
(source type)

Circuit configuration

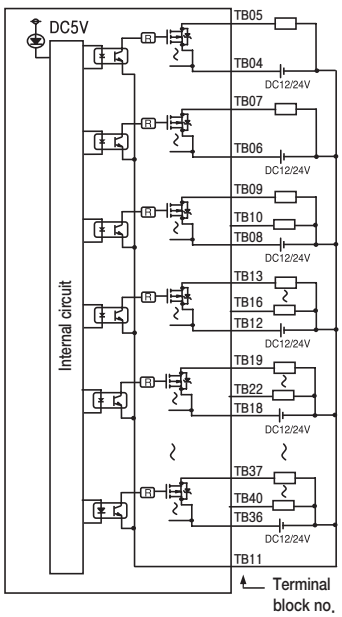

No.	Contact	No.	Contact
TB2	PE	TB1	AC100
TB4	C0M0	TB3	-240V
TB6	C0M1	TB5	00
TB8	C0M2	TB7	01
TB10	03	TB9	02
TB12	COM3	TB11	N
TB14	05	TB13	04
TB16	07	TB15	06
TB18	COM4	TB17	NC
TB20	09	TB19	08
TB22	11	TB21	10
TB24	COM5	TB23	NC
TB26	13	TB25	12
TB28	15	TB27	14
TB30	COM6	TB29	NC
TB32	17	TB31	16
TB34	19	TB33	18
TB36	COM7	TB35	NC
TB38	21	TB37	20
TB40	23	TB39	22
TB42	24G	TB41	24V

Type

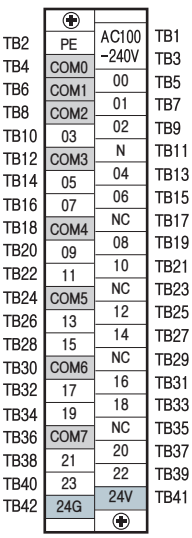

* XBC input : P00~P23, XEC input : I00~I35 * XBC output : P40~P57, XEC output : Q00~Q23